Lab 1: Digital Logic Gates

Objectives

- To study the basic logic gates: AND, OR, INVERT, NAND, and NOR.
- To study the representation of these functions by truth tables, logic diagrams and Boolean algebra.
- To observe the pulse response of logic gates.
- To measure the propagation delay of logic gates.

Apparatus

7400 Quadruple 2-input NAND gates
7402 Quadruple 2-input NOR gates
7404 Hex Inverters (x2)
7408 Quadruple 2-input AND gates
7432 Quadruple 2-input OR gates
7486 Quadruple 2-input XOR gate
CADET trainer
Dual-trace oscilloscope

Theory

AND A multi-input circuit in which the output is 1 only if all inputs are 1.The symbolic representation of the AND gate is shown in Fig. 1a.

OR A multi-input circuit in which the output is 1 when any input is 1. The symbolic representation of the OR gate is shown in Fig. 1b.

INVERT The output is 0 when the input is 1, and the output is 1 when the input is 0. The symbolic representation of an inverter is shown in Fig. 1c.

NAND AND followed by INVERT. The symbolic representation of the NAND gate is shown in Fig 1d.

NOR OR followed by INVERT as shown in Fig. 1e.

EX-OR The output of the Exclusive –OR gate, is 0 when it's two inputs are the same and it's output is 1 when its two inputs are different, Fig. 1f.

Truth Table Representation of the output logic levels of a logic circuit for every possible combination of levels of the inputs. This is best done by means of a systematic tabulation.

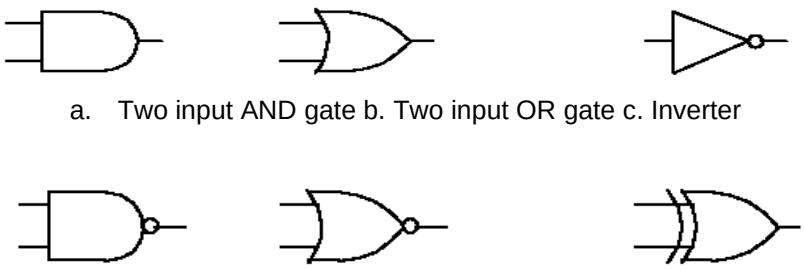

a. Two input AND gate b. Two input OR gate c. Inverter

d. Two input NAND gate e. Two input XOR gate f. Two input NOR gate

Fig. 1 Symbols for digital logic gates

Part 1: Logic Functions
I. AND, OR, NAND, and NOR gates.

1. Use one gate for each IC 7400 (NAND), 7402 (NOR), 7408 (AND), 7432 (OR), 7486 (XOR). Each has input pins* 1 and 2, and output pin 3.
2. Connect pin 1 to switch S1-1, pin 2 to switch S1-2, and pin 3 to LED-1 for every gate as shown in Fig. 2 as an example for the NAND gate.

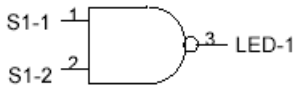

Fig. 2 Two input NAND gate

3. Using logic switches S1-1 and S-2, apply the logic levels 0 and 1 to gate inputs (pin 1, pin 2), in the sequence shown in Table 1. Record the output logic levels (see LED-1) in Table 1. Repeat the recordings for each gate. Remember: LED ON = Logic 1, (High) LED OFF = Logic 0 (Low)

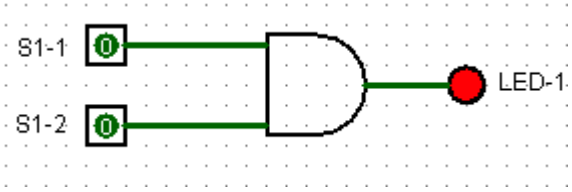

Table 1 - AND Gate

Pin 1	Pin 2	Pin 3
0	0	0
0	1	0
1	0	0
1	1	1

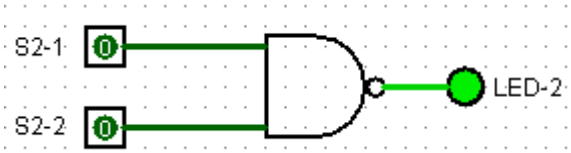

Table 1 – NAND Gate

Pin 1	Pin 2	Pin 3
0	0	1
0	1	0
1	0	0
1	1	0

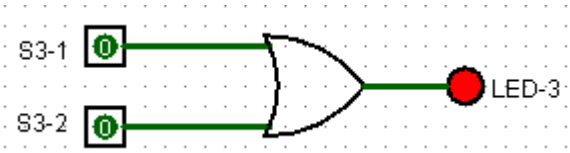

Table 1 – OR Gate

Pin 1	Pin 2	Pin 3
0	0	0
0	1	1
1	0	1
1	1	1

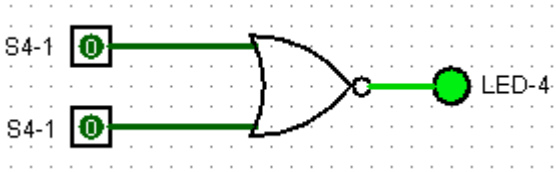

Table 1 – NOR Gate

Pin 1	Pin 2	Pin 3
0	0	1
0	1	0
1	0	0
1	1	0

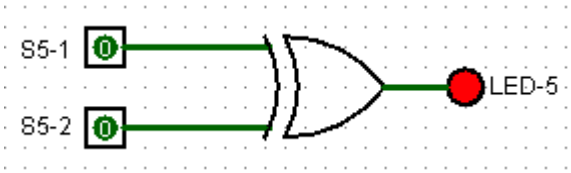

Table 1 – XOR Gate

Pin 1	Pin 2	Pin 3
0	0	0
0	1	1
1	0	1
1	1	0

4. Use an inverter gate from IC 7404 whose input pin is pin 1 and whose output pin is pin 2.

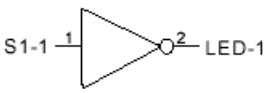

Fig. 3 Inverter gate

5. Using logic switches S1-1, apply the logic levels 0 and 1 in the sequence shown in Table 2. Record the output logic levels in Table 2.

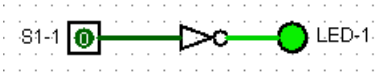

Table 2 – Inverter Gate

Pin 1	Pin 2
0	1
1	0
1	0
0	1

Part-2: Response of Logic Gates:
Connect the circuits of Fig. 4 and 5 and write the corresponding truth tables 3 and 4, respectively.

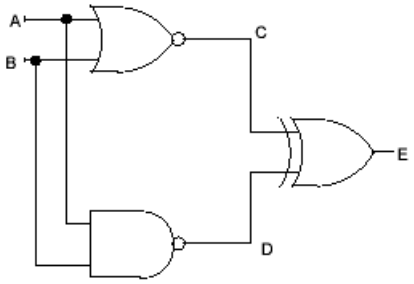

Fig. 4

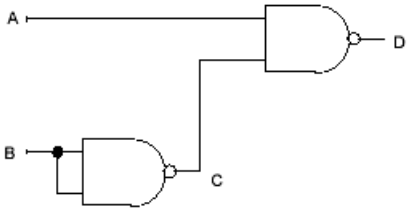

Fig. 5

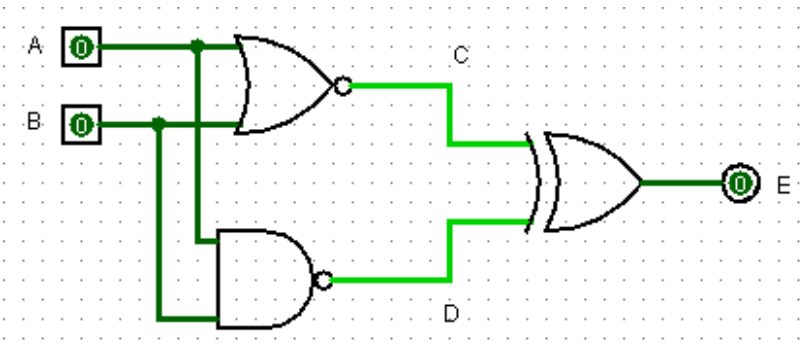

Fig. 4

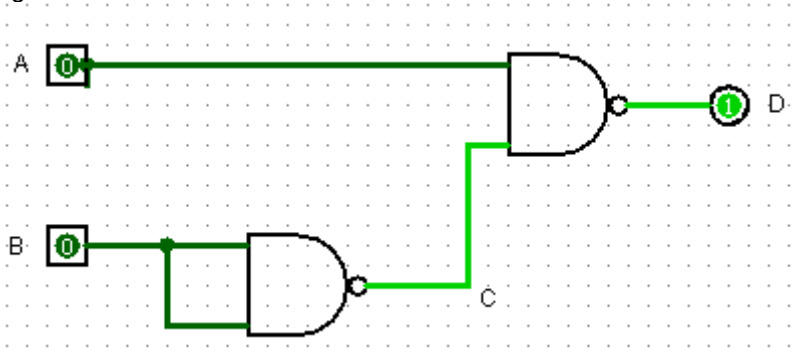

Fig. 5

Table 3

A	B	C	D	E
0	0	1	1	0
0	1	0	1	1
1	0	0	1	1
1	1	0	0	0

Table 4

A	B	C	D
0	0	1	1
0	1	0	1
1	0	1	0
1	1	0	1

Part 3: Review Questions:

1. Write a truth table for each circuit. Derive Boolean expressions for all outputs.

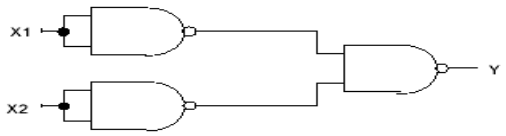

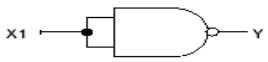

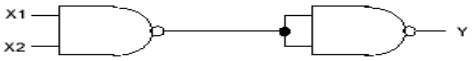

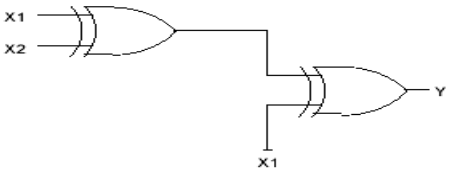

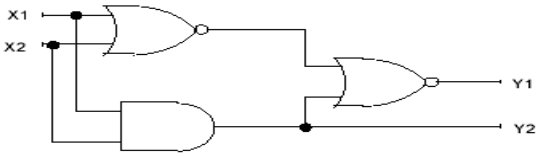

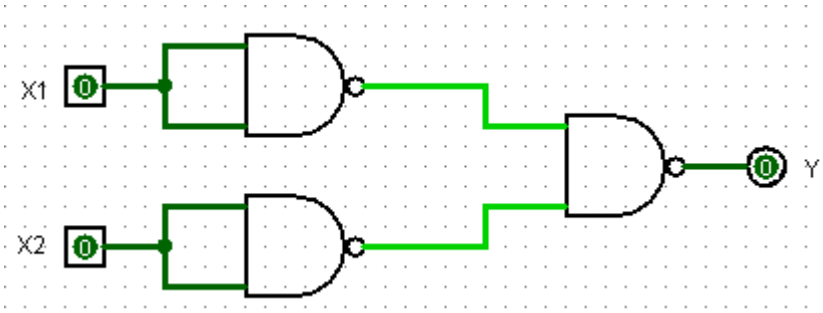

X1	X2	Y
0	0	0
0	1	1
1	0	1
1	1	1

Derive Boolean Expression: Y=X1+X2

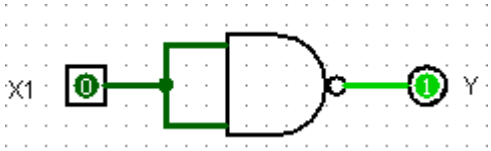

X1	Y
0	1
1	0

Derive Boolean Expression: Y= X1′

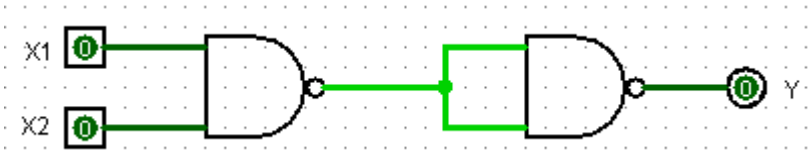

X1	X2	Y
0	0	0
0	1	0
1	0	0
1	1	1

Derive Boolean Expression: Y= X1*X2

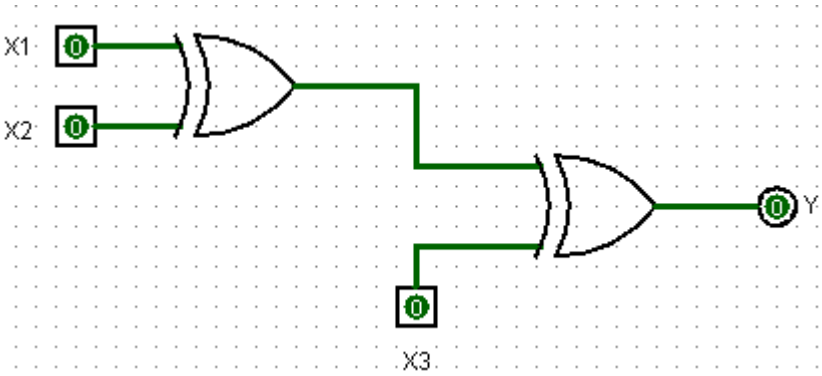

X1	X2	X3	Y
0	0	0	0
0	0	1	1
0	1	0	1
0	1	1	0
1	0	0	1
1	0	1	0
1	1	0	0
1	1	1	1

Derive Boolean Expression: Y=(X1⊕X2)⊕X3

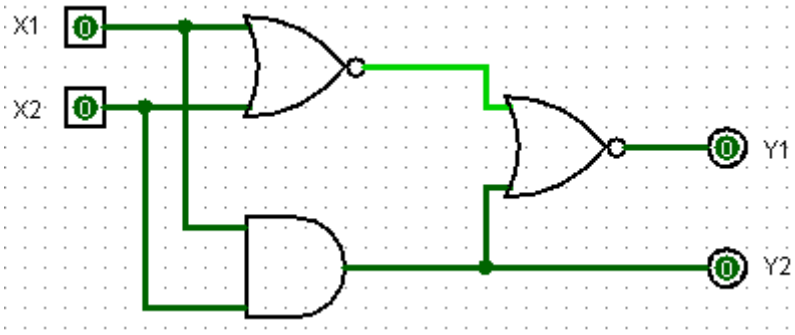

X1	X2	Y1	Y2
0	0	0	0
0	1	1	0
1	0	1	0
1	1	0	1

Derive Boolean Expression: Y1=(X1+X2)*(X1′*X2′)
Y2=(X1*X2)

2. A burglar alarm for a car has a normally low switch on each of four doors. If any door is opened the output of that switch goes HIGH. The alarm is set off with an active-LOW output signal. What type of gate will provide this logic? Support your answer with an explanation.

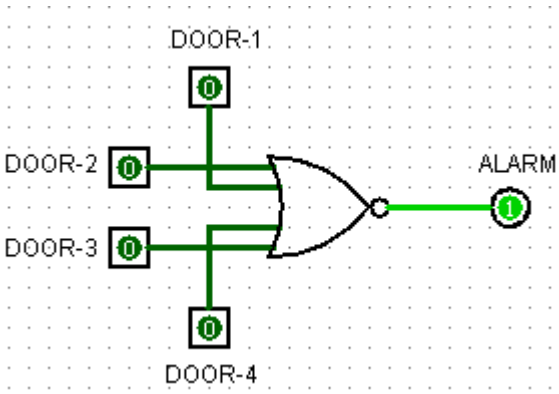

DOOR 1	DOOR 2	DOOR 3	DOOR 4	ALARM
0	0	0	0	1
0	0	0	1	0
0	0	1	0	0
0	0	1	1	0
0	1	0	0	0
0	1	0	1	0
0	1	1	0	0
0	1	1	1	0
1	0	0	0	0
1	0	0	1	0
1	0	1	0	0
1	0	1	1	0
1	1	0	0	0
1	1	0	1	0
1	1	1	0	0
1	1	1	1	0

A **4-input NOR gate** is the ideal choice for the burglar alarm system. Each door has a normally LOW switch that goes HIGH when opened. The NOR gate outputs HIGH (1) only if all doors are closed (0,0,0,0), keeping the alarm OFF. If any door opens (any input = 1), the NOR gate outputs LOW (0), activating the alarm as required for an **active-LOW** signal. This provides a simple and efficient solution without additional components.